Gospodarska zbornica Slovenije

eSLOG 2.0

Elektronska potrditev naročila

September 2020

Slovenska različica

eSLOG 2.0 - Elektronska potrditev naročila

eSLOG

Center za ePoslovanje Slovenije

www.epos.si

READINESS OF SLOVENIAN E-INVOICING ROSE 2

Co-financed by the Connecting Europe Facility of the European Union

Pravice in stiki

eSLOG je blagovna znamka Gospodarske zbornice Slovenije. Dokumentacijo eSLOG 2.0 Elektronsko naročilo je pripravila delovna skupina projekta ROSE 2 »Readiness of Slovenian e-Invoicing 2«, št. 2019-SI-IA-0006, ki je sofinanciran prek Instrumenta za povezovanje Evrope (CEF). Za to publikacijo je odgovoren izključno avtor. Evropska unija ne odgovarja za kakršno koli morebitno uporabo v njej navedenih informacij.

Dokumentacija eSLOG 2.0 Elektronsko naročilo je objavljena na spletnem mestu Centra za ePoslovanje Slovenije https://www.epos.si/.

Uporabnikom je dovoljena uporaba vsega objavljenega gradiva za namene elektronskega poslovanja. Uporaba je brezplačna. Spreminjanje vsebine shem ni dovoljeno.

Gospodarska zbornica Slovenije in partnerji, ki so sodelovali v delovni skupini projekta ROSE 2 za pripravo standarda eSLOG 2.0, ne prevzemajo neposredne ali posredne odgovornosti za morebitno škodo, ki bi nastala pri uporabi standarda eSLOG 2.0.

Naslovi za stik:

Gospodarska zbornica Slovenije
Dimičeva 13
1504 Ljubljana
Telefonska št.: (01) 58 98 000
E-naslov: eslog@epos.si
Splet: https://www.epos.si

ZZI, d. o. o.
Pot k sejmišču 33
1231 Ljubljana Črnuče
Telefonska št.: (01) 53 03 300
E-naslov: info@zzi.si
Splet: https://www.zzi.si

Uprava Republike Slovenije za javna plačila
Dunajska cesta 48
1000 Ljubljana
Telefonska št.: (01) 47 51 651
E-naslov: ujp@ujp.gov.si
Splet: http://www.ujp.gov.si

Kazalo

1 Področje uporabe 4
2 Zveze s standardi 4
3 Izrazi in definicije 4
4 Proces potrditve naročila 4
4.1 Vključene poslovne stranke ter njihove vloge in odnosi 4
4.2 Poslovni proces Potrditve naročila 4
5 Tipi potrditev naročil 5
6 Semantični podatkovni model ePotrditve naročila 6
6.1 Semantični model 6
6.2 Poslovna pravila 8
7 Sestava sporočila za ePotrditev naročila 10
8 Razvejitveni diagram za ePotrditev naročila 11
9 Podatki o segmentih elektronske potrditve naročila 12
10 Šifranti v ePotrditvi naročila 49
Dodatek A (informativni) Poslovni termini (BT) 68
A.1 Seznam in opis poslovnih terminov (BT) in skupin poslovnih terminov (BG) 68
Dodatek B (informativni) Shema eSLOG 2.0 elektronsko potrditev naročila 72
B.1 Shema .XML 72
Dodatek C (informativni) Demonstracijski primer uporabe 73
C.1 Primer uporabe elementov segmenta 73
Literatura 74

1 Področje uporabe

Namen dokumenta je opredeliti semantični model in sintaktično obliko sporočila za elektronsko potrditev naročila ter omogočiti učinkovito izvajanje in večjo uporabo elektronskega poslovanja pri postopku naročanja, ki temelji na tej obliki.

2 Zveze s standardi

Za uporabo tega standarda so, delno ali v celoti, nujno potrebni spodaj navedeni dokumenti. Pri datiranih sklicevanjih se uporablja le navedena izdaja. Pri nedatiranih sklicevanjih se uporablja zadnja izdaja publikacije (vključno z dopolnili).

- eSLOG 2.0 - Splošna navodila za elektronsko naročilo, elektronsko potrditev naročila in elektronsko dobavnico (v nadaljevanju eSLOG 2.0 Splošna navodila)

3 Izrazi in definicije

V tem dokumentu so uporabljeni izrazi in definicije, ki so podani v dokumentu eSLOG 2.0 Splošna navodila.

4 Proces potrditve naročila

4.1 Vključene poslovne stranke ter njihove vloge in odnosi

V osnovnem postopku nabave od naročila do dobave sodelujeta dva poslovna partnerja, Naročnik in Dobavitelj. Vsak partner lahko v postopku izpolni dve ali tri vloge.

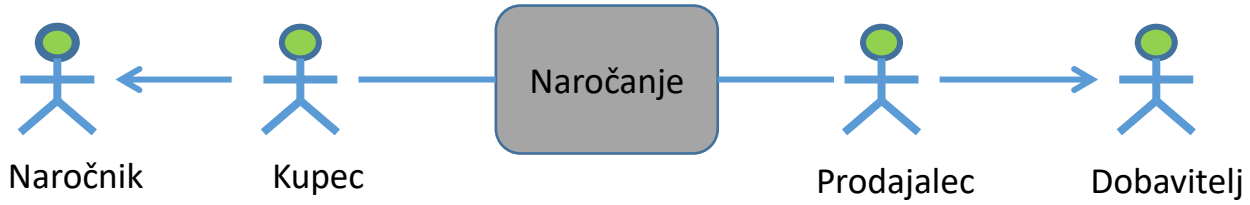

V procesu Potrditve naročila so vključene predvsem funkcije/vloge na strani dobavitelja, pri čemer ima komercialno vlogo Prodajalec, ki pri Dobavitelju preveri zmožnost izvedbe prejetega naročila skladno z definiranimi pogoji.

V okviru operativnih vlog na strani dobavitelja v odvisnosti od vrste naročila poteka preverjanje zmožnosti izvedbe naročila:

- Ob izvedbi naročila iz zaloge ima glavno vlogo dostava, ki pripravi in sproži dostavo naročenega blaga ali storitve.
- Ob potrebi po izdelavi naročenih materialov je pri potrditvi naročila pomembna vloga planiranja proizvodnje, ki v okviru proizvodnih zmožnosti preveri možnosti izdelave naročila.

4.2 Poslovni proces Potrditve naročila

Osnovni cilj procesa potrditve naročila je, da naročnik čim prej dobi povratno informacijo o možnostih realizacije naročila. Po prejetem naročilu Prodajalec posreduje naročilo Dobavitelju in ta preveri možnosti izvedbe naročila na osnovi zalog oziroma v službi planiranja proizvodnje možnosti izvedbe/proizvodnje zahtevanih proizvodov.

Dobavitelj mora naročniku v pogodbeno dogovorjenem roku poslati dokument o potrditvi naročila, ki vsebuje podatke treh mogočih scenarijev:

- Sprejeto naročilo: Naročilo je sprejeto, izdelki bodo dostavljeni skladno s parametri naročila.
- Zavrnjeno naročilo: Naročilo dobavitelj zavrne.
- Spremembe naročila: Dobavitelj predlaga spremembe naročila v pogodbeno dogovorjenih mejah. Spremembe se lahko nanašajo na celotno naročilo ali pa na posamezne postavke iz naročila in lahko opredeljujejo na primer:
    - Spremembe količin
    - Spremembe datuma dobave
    - Spremembe materialov/blaga s ponudbo substitutov
    - Spremembe cen ponujenega blaga

5 Tipi potrditev naročil

V standardu eSLOG 2.0 za elektronsko potrditev naročila je predviden le en tip dokumenta. Skladno s šifrantom je označen s šifro 231.

Vendar pa je zelo pomemben podatek tudi vloga dokumenta. Mogoč nabor vrednosti je opisan spodaj.

Šifra	Vloga	Opis
4	Sprememba (angl. change)	Naročilo ni potrjeno s prvotnimi podatki. Spremembe so se lahko zgodile na nivoju dokumenta (na primer spremenjen datum dobave) ali na nivoju postavk (na primer spremenjena količina). Spremembe se lahko nanašajo na eno ali več postavk. Kako naročnik postopa ob spremembah, je odvisno od medsebojnega dogovora med partnerji.
27	Zavrnjeno (angl. not accepted)	Dobavitelj ni sprejel naročila. Čeprav se ta status nanaša na celotno naročilo, je dobra praksa, da se v dokumentu kljub temu navede vse postavke, ki jih je vsebovalo prvotno naročilo, nato pa se potrjena količina (BT-48) na vsaki postavki nastavi na 0 (nič).
29	Sprejeto brez sprememb (angl. accepted without amendment)	Dobavitelj je v celoti sprejel naročilo, kot mu ga je poslal naročnik. Tudi v tem primeru se navede vse postavke, kot so bile navedene v prvotnem naročilu, z ustreznimi sklici na številke vrsti. Potrjene količine (BT-48) se nastavi na enako vrednost, kot je bila navedena v prvotnem poslanem naročilu.
45	Delno sprejeto (angl. accepted with reserves).	Dobavitelj je sprejel le nekatere postavke na naročilu, preostale pa je zavrnil. V tem primeru v dokumentu navedemo vse postavke prvotnega naročila in z uporabo potrjenih količin (BT-48) označimo, katere postavke niso bile sprejete (potrjeno količino (BT-48) nastavimo na 0 (nič)). Na postavkah, ki jih sprejemamo, nastavimo vrednost, ki je enaka vrednosti v prvotnem naročilu.

6 Semantični podatkovni model ePotrditve naročila

Semantični model ePotrditve naročila vključuje poslovne termine in poslovna pravila.

6.1 Semantični model

ID	Nivo	Kard.	Poslovni termin
BT-1	+	1..1	Unikatna številka sporočila, ki jo določi pošiljatelj
BT-2	+	1..1	Oznaka vrste potrditve naročila
BT-3	+	1..1	Številka potrditve naročila, ki jo določi pošiljatelj
BT-4	+	1..1	Vloga dokumenta potrditve naročila
BT-5	+	1..1	Datum in čas izdelave sporočila (137)
BT-6	+	0..1	Predviden datum dobave (17)
BT-7	+	0..1	Preostali datumi, vezani na potrditev naročila
BT-8	+	1..1	Valuta zneskov na potrditvi naročila
BT-9	+	1..1	Referenca na naročilo, na katero se potrditev naročila navezuje (ON)
BT-10	+	0..1	Datum naročila, na katero se potrditev naročila navezuje (ON)
BG-1	+	0..n	Referenčni dokumenti
BT-11	++	1..1	Tip referenčnega dokumenta, na katerega se potrditev naročila navezuje
BT-12	++	1..1	Številka referenčnega dokumenta, na katerega se potrditev naročila navezuje
BT-13	++	0..1	Datum referenčnega dokumenta, na katerega se potrditev naročila navezuje
BG-2	+	1..1	Podatki o kupcu
BT-14	++	0..1	GLN kupca (BY)
BT-15	++	1..1	Davčna številka kupca (VA)
BT-16	++	0..n	Preostali referenčni podatki kupca
BG-3	++	0..1	Naziv in naslov kupca
BT-17	+++	1..1	Naziv kupca
BT-18	+++	1..1	Ulica in hišna številka kupca
BT-19	+++	1..1	Mesto kupca
BT-20	+++	1..1	Poštna številka kupca
BT-21	+++	1..1	Država kupca
BG-4	++	0..n	Kontaktni podatki kupca
BT-22	+++	0..1	Kontaktne osebe kupca
BT-23	+++	0..1	Naslovi za kontakt kupca
BG-5	+	1..1	Podatki o dobavitelju
BT-24	++	0..1	GLN dobavitelja (SU)
BT-25	++	1..1	Davčna številka dobavitelja (VA)
BT-26	++	0..1	Referenčni podatki dobavitelja
BG-6	++	0..1	Naziv in naslov dobavitelja
BT-27	+++	1..1	Naziv dobavitelja
BT-28	+++	1..1	Ulica in hišna številka dobavitelja
BT-29	+++	1..1	Mesto dobavitelja
BT-30	+++	1..1	Poštna številka dobavitelja

ID	Nivo	Kard.	Poslovni termin
BT-31	+++	1..1	Država dobavitelja
BG-7	++	0..n	Kontaktni podatki dobavitelja
BT-32	+++	0..1	Kontaktne osebe dobavitelja
BT-33	+++	0..1	Naslovi za kontakt dobavitelja
BG-8	+	0..1	Podatki o dostavnem mestu
BT-34	++	0..1	GLN dostavnega mesta (DP)
BT-35	++	0..1	Referenčni podatki dostavnega mesta
BG-9	++	0..1	Naziv in naslov dostavnega mesta
BT-36	+++	0..1	Naziv dostavnega mesta
BT-37	+++	0..1	Ulica in hišna številka dostavnega mesta
BT-38	+++	0..1	Mesto dostavnega mesta
BT-39	+++	0..1	Poštna številka dostavnega mesta
BT-40	+++	0..1	Država dostavnega mesta
BG-10	++	0..n	Kontaktni podatki dostavnega mesta
BT-41	+++	0..1	Kontaktne osebe dostavnega mesta
BT-42	+++	0..1	Naslovi za kontakt dostavnega mesta
BG-11	+	1..n	Podatki o postavkah
BT-43	++	1..1	Številka postavke
BT-44	++	1..1	Oznaka stanja postavke glede na podatke naročila
BT-45	++	0..1	GTIN-številka artikla
BT-46	++	1..1	Količina naročenega artikla (21)
BT-47	++	1..1	Enota mere naročenega artikla (21)
BT-48	++	1..1	Potrjena količina artikla (113)
BT-49	++	1..1	Enota mere potrjene količine artikla (113)
BT-50	++	0..1	Število enot za končnega potrošnika v naročenem artiklu (59)
BT-51	++	0..1	Enota mere za število enot za končnega potrošnika v naročenem artiklu (59)
BT-52	++	0..1	Predviden datum dobave artikla (17)
BT-53	++	0..1	Vrednost postavke (203)
BT-54	++	1..1	Številka postavke originalnega naročila, na katerega se postavka iz potrditve naročila nanaša (ON)
BG-12	++	0..n	Identifikacija naročenega artikla
BT-55	+++	1..1	Tip identifikacije artikla
BT-56	+++	1..1	Številka identifikacije artikla
BT-57	+++	1..1	Vrsta identifikacije artikla
BT-58	+++	0..1	Opis artikla
BG-13	++	0..n	Podatki o ceni artikla
BT-59	+++	0..1	Vrsta cene artikla
BT-60	+++	0..1	Cena artikla
BT-61	+++	0..1	Specifikacija cene artikla
BT-62	+++	0..1	Količina na enoto cene
BT-63	+++	0..1	Merska enota cene

6.2 Poslovna pravila

ID	Opis	BT / BG
BR-01	Unikatna številka sporočila, ki jo določi pošiljatelj (BT-1), je obvezen podatek.	BT-1
BR-02	Oznaka vrste potrditve naročila (BT-2) je obvezen podatek.	BT-2
BR-03	Številka potrditve naročila, ki jo določi pošiljatelj (BT-3), je obvezen podatek.	BT-3
BR-04	Vloga dokumenta potrditve naročila (BT-4) je obvezen podatek.	BT-4
BR-05	Datum in čas izdelave sporočila (BT-5) sta obvezna podatka.	BT-5
BR-06	Davčna številka kupca (BT-15) je obvezen podatek.	BT-15
BR-07	Davčna številka dobavitelja (BT-25) je obvezen podatek.	BT-25
BR-08	Če se na potrditvi naročila nahajajo zneski (BT-59) ali cene (BT-61), je valuta zneskov na potrditvi naročila (BT-8) obvezen podatek.	BT-8, BT-59, BT-61
BR-09	Referenca na naročilo, na katero se potrditev naročila navezuje (BT-9), je obvezen podatek.	BT-9
BR-10	Če potrditev naročila vsebuje cene (BT-61) ali zneske (BT-59), morajo biti vsi navedeni v isti valuti (BT-8).	BT-8, BT-59, BT-61
BR-11	Če ni vpisanega GLN kupca (BT-14), so naslednji podatki obvezni: – Naziv kupca (BT-17) – Ulica in hišna številka kupca (BT-18) – Mesto kupca (BT-19) – Poštna številka kupca (BT-20) – Država kupca (BT-21)	BT-14, BT-17, BT-18, BT-19, BT-20, BT-21
BR-12	Če ni vpisanega GLN dobavitelja (BT-24), so naslednji podatki obvezni: – Naziv dobavitelja (BT-27) – Ulica in hišna številka dobavitelja (BT-28) – Mesto dobavitelja (BT-29)	BT-24, BT-27, BT-28, BT-29,

ID	Opis	BT / BG
	– Poštna številka dobavitelja (BT-30) – Država dobavitelja (BT-31)	BT-30, BT-31
BR-13	Če so vpisani podatki za dostavno mesto in to ni identificirano z GLN-jem dostavnega mesta (BT-34), so naslednji podatki obvezni: – Naziv dostavnega mesta (BT-36) – Ulica in hišna številka dostavnega mesta (BT-37) – Mesto dostavnega mesta (BT-38) – Poštna številka dostavnega mesta (BT-39) – Država dostavnega mesta (BT-40)	BT-34, BT-36, BT-37, BT-38, BT-39, BT-40
BR-14	Davčne številke na naročilu morajo imeti predpono države skladno z ISO-kodo po šifrantu ISO 3166-1 alpha-2. Izjemoma lahko Grčija uporablja kodo EL.	BT-20 BT-30
BR-15	Če ni vpisane GTIN-številke dobavnega artikla (BT-45), so naslednji podatki obvezni: – Tip identifikacije artikla (BT-55) – Številka identifikacije artikla (BT-56) – Vrsta identifikacije artikla (BT-57) – Opis artikla (BT-58)	BT-45, BT-55, BT-56, BT-57, BT-58
BR-16	Vsaka vrstica potrditve naročila (BG-11) mora imeti referenco na vrstico naročila (BT-54).	BT-54
BR-17	Vsaka vrstica potrditve naročila (BG-11) mora vsebovati potrjeno količina artikla (BT-48).	BT-48
BR-18	Vsaka vrstica potrditve naročila (BG-11) mora vsebovati enoto mere potrjene količina artikla (BT-49).	BT-49
BR-19	Vsaka vrstica potrditve naročila mora vsebovati oznako stanja postavke glede na podatke naročila (BT-44).	BT-44

7 Sestava sporočila za ePotrditev naročila

UNB	1	M	1	- Interchange header
UNH	2	M	1	- Message header
BGM	3	M	1	- Beginning of message
DTM	4	M	35	- Date/time/period
SG1		R	9999	- RFF-DTM
RFF	5	M	1	- Reference
DTM	6	C	5	- Date/time/period
SG3		C	99	- NAD-SG4-SG6
NAD	7	M	1	- Name and address
SG4		D	99	- RFF
RFF	8	M	1	- Reference
SG6		C	5	- CTA-COM
CTA	9	M	1	- Contact information
COM	10	C	5	- Communication contact
SG3		C	99	- NAD-SG4-SG6
NAD	11	M	1	- Name and address
SG4		D	99	- RFF
RFF	12	M	1	- Reference
SG6		C	5	- CTA-COM
CTA	13	M	1	- Contact information
COM	14	C	5	- Communication contact
SG3		C	99	- NAD-SG4-SG6
NAD	15	M	1	- Name and address
SG4		D	99	- RFF
RFF	16	M	1	- Reference
SG6		C	5	- CTA-COM
CTA	17	M	1	- Contact information
COM	18	C	5	- Communication contact
SG8		C	5	- CUX
CUX	19	M	1	- Currencies
SG12		C	5	- TOD
TOD	20	M	1	- Terms of delivery or transport
SG26		C	200000	- LIN-PIA-IMD-QTY-DTM-MOA-SG30-SG31
LIN	21	M	1	- Line item
PIA	22	C	25	- Additional product id
IMD	23	C	99	- Item description
QTY	24	C	99	- Quantity
DTM	25	C	35	- Date/time/period
MOA	26	C	10	- Monetary amount
SG30		C	25	- PRI-CUX
PRI	27	M	1	- Price details
CUX	28	C	1	- Currencies
SG31		C	9999	- RFF
RFF	29	M	1	- Reference
UNS	30	C	1	- Section control
UNT	31	C	1	- Message trailer
UNZ	32	M	1	- Interchange trailer

8 Razvejitveni diagram za ePotrditev naročila

Razvejitveni diagram predstavlja hierarhični prikaz segmentov.

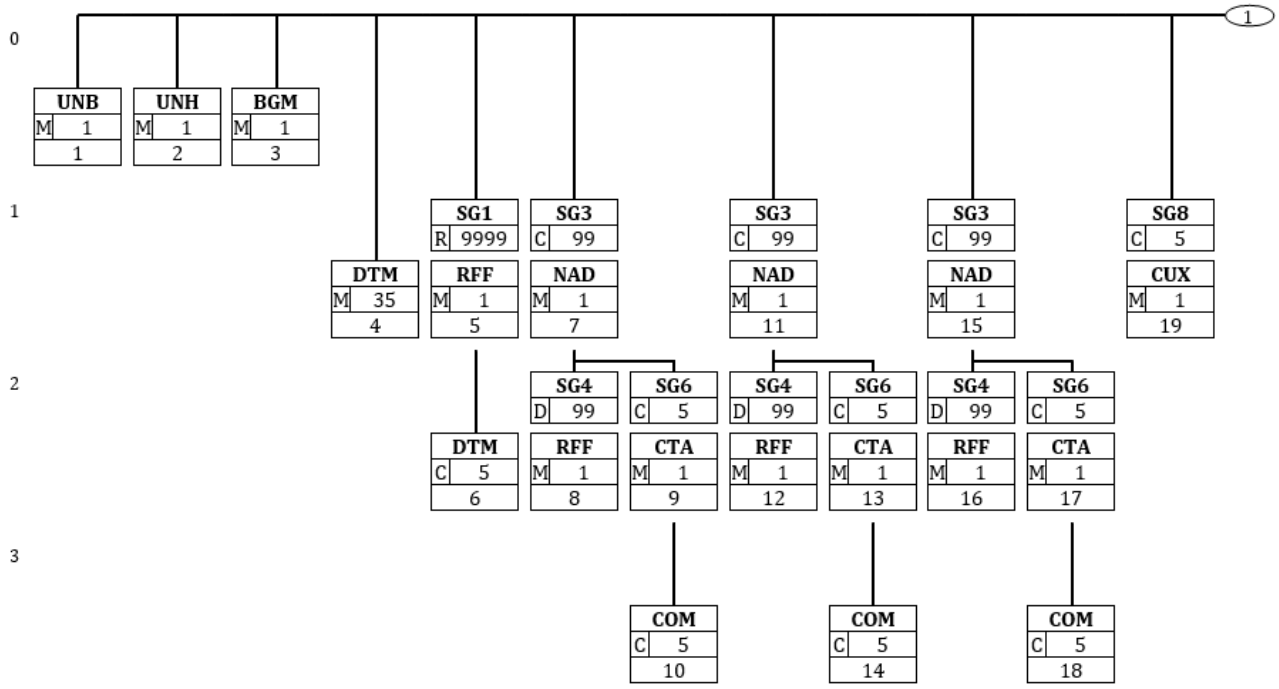

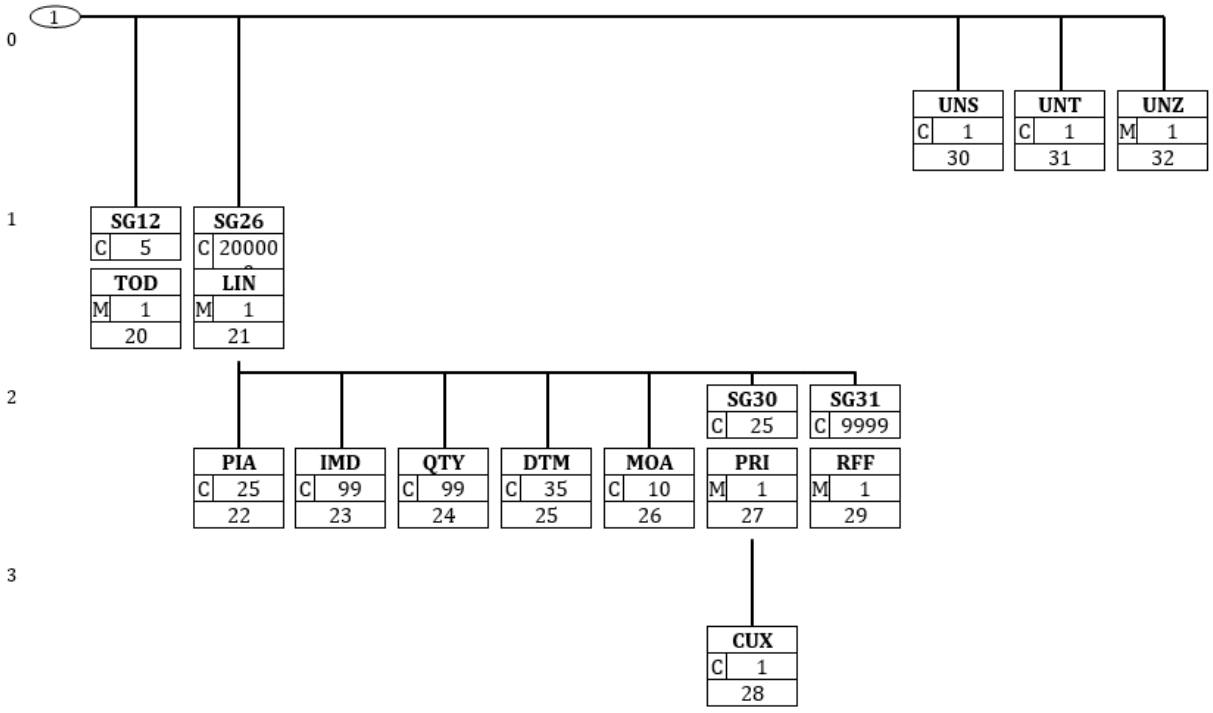

9 Podatki o segmentih elektronske potrditve naročila

Posamezen segment je opisan po elementih in navodilih za uporabo teh elementov. Navedene so povezave na poslovne termine (BT) semantičnega modela in primer vrednosti iz demonstracijskega primera[1]. Pri opisih segmenta je uporabljeno poimenovanje po EANCOM 2002 S4, zato je opis v angleškem jeziku.

Segment number: 1

UNB - M 1 - Interchange header

Function:
To identify an interchange.

Notes:
1. S001/0002, shall be '4' to indicate this version of the syntax.
2. The combination of the values carried in data elements S002, S003 and 0020 shall be used to identify uniquely the interchange, for the purpose of acknowledgement.

e-SLOG 2.0					
Tag	Name	Format	St	Usage	Example
S001	SYNTAX IDENTIFIER		**M**		
0001	Syntax identifier	a4	**M**		UNOC
0002	Syntax version number	an1	**M**		4
0080	Service code list directory version number	an..6	**C**		X
0133	Character encoding, coded	an..3	**C**		X
S002	INTERCHANGE SENDER		**M**		
0004	Interchange sender identification	an..35	**M**		X
0007	Identification code qualifier	an..4	**C**		14
0008	Interchange sender internal identification	an..35	**C**		X
0042	Interchange sender internal sub-identification	an..35	**C**		X
S003	INTERCHANGE RECIPIENT		**M**		
0010	Interchange recipient identification	an..35	**M**		X
0007	Identification code qualifier	an..4	**C**		14
0014	Interchange recipient internal identification	an..35	**C**		X
0046	Interchange recipient internal sub-identification	an..35	**C**		X
S004	DATE AND TIME OF PREPARATION		**M**		
0017	Date	n8	**M**		20180828
0019	Time	n4	**M**		0916
0020	Interchange control reference	an..14	**M**		X

[1] Demonstracijski primer je v Dodatku C.

Segment number: 1

e-SLOG 2.0					
Tag	Name	Format	St	Usage	Example
S005	RECIPIENT REFERENCE/ PASSWORD DETAILS		**C**		
0022	Recipient reference/password	an..14	**M**		X
0025	Recipient reference/password qualifier	an2	**C**		AA
0026	Application reference	an..14	**C**		X
0029	Processing priority code	a1	**C**		A
0031	Acknowledgement request	n1	**C**		1
	Interchange agreement				X
0032	identifier	an..35	**C**		
0035	Test indicator	n1	**C**		1
Segment Notes:					

Segment number: 2

UNH	- M	1 - Message header

Function:
To head, identify and specify a message.

Notes:
1. Data element S009/0057 is retained for upward compatibility. The use of S016 and/or S017 is encouraged in preference.
2. The combination of the values carried in data elements 0062 and S009 shall be used to identify uniquely the message within its group (if used) or if not used, within its interchange, for the purpose of acknowledgement.

e-SLOG 2.0					
Tag	Name	Format	St	Usage	Example
0062	Message reference number	an..14	**M**	Sender's unique message reference. Sequence number of the messages in the interchange. DE 0062 in the UNT will be exactly the same. Sender generated. Numbers in ascending order without gaps. BT-1: Unikatna številka sporočila, določena s strani pošiljatelja.	1
S009	MESSAGE IDENTIFIER		**M**		
0065	Message type	an..6	**M**		ORDRSP
0052	Message version number	an..3	**M**		D
0054	Message release number	an..3	**M**		01B
0051	Controlling agency, coded	an..3	**M**	UN = UN/CEFACT	UN

Segment Notes:
This segment is used to head, identify and specify a message.

Segment number: 3

BGM	- M	1 - Beginning of message			
Function: To indicate the type and function of a message and to transmit the identifying number.					
e-SLOG 2.0					
Tag	Name	Format	St	Usage	Example
C002	DOCUMENT/MESSAGE NAME		**R**		
1001	Document name code	an..3	**R**	231 = Purchase order response BT-2: Oznaka vrste potrditve naročila.	231
C106	DOCUMENT/MESSAGE IDENTIFICATION		**R**		
1004	Document identifier	an..70	**R**	Order response Number assigned by document sender. It is recommended that the length of the document number be restricted to a maximum of 17 characters. BT-3: Številka potrditve naročila, določena s strani pošiljatelja.	12856
1225	Message function code	an..3	**R**	4 = Change 27 = Not accepted 29 = Accepted without amendment 45 = Accepted with reserves BT-4: Vloga dokumenta potditve naročila.	29

Segment Notes:

This segment is used to indicate the type and function of a message and to transmit the identifying number.
It is recommended that all line items from original Purchase Order are included in message regardless what is in DE 1225.

Segment number: 4

DTM - M 35 - Date/time/period					
Function: To specify date, and/or time, or period.					
e-SLOG 2.0					
Tag	Name	Format	St	Usage	Example
C507	DATE/TIME/PERIOD		**M**		
2005	Date or time or period function code qualifier	an..3	**M**	137 = Document/message date/ time 17 = Delivery date/time, estimated 63 = Delivery date/time, latest 64 = Delivery date/time, earliest 69 = Delivery date/time, promised for 76 = Delivery date/time, scheduled for Code value 137 is required.	137
2380	Date or time or period value	an..35	**R**	BT-5: Datum in čas izdelave sporočila (137). BT-6: Predviden datum dobave (17). BT-7: Ostali datumi vezani na potrditev naročila.	201802280 94850
2379	Date or time or period format code	an..3	**R**	204 = CCYYMMDDHHMMSS 102 = CCYYMMDD	204

Segment Notes:

This segment is used to specify dates/times relating to the Purchase Order Response, or if required, dates relating to the delivery or collection of the goods.
DE 2005: Identification of the 'Document/message date/time' (code value 137) is mandatory in an EANCOM message.

Segment number: 5

SG1	- R	9999	-	RFF-DTM
RFF	- M	1	-	Reference

Function:
To specify a reference.

e-SLOG 2.0					
Tag	Name	Format	St	Usage	Example
C506	REFERENCE		**M**		
1153	Reference code qualifier	an..4	**M**	CT = Contract number ON = Order number (buyer) VN = Order number (supplier) BT-11: Tip referenčnega dokumenta, na katerega se potrditev naročila navezuje.	ON
1154	Reference identifier	an..70	**R**	BT-9: Referenca na naročilo, na katerega se potrditev naročila navezuje (ON). BT-12: Številka referenčnega dokumenta, na katere se potrditev naročila navezuje.	128576

Segment Notes:

This segment is used to refer to the Purchase Order or Purchase Order Change Request to which the Purchase Order Response is responding.
Additionally, further reference can be provided as corrections or clarifications to a previously sent Purchase Order or Purchase Order Change Request. References should normally be given at this point if they apply to all or a majority of the line items.

Segment number: 6

SG1	- R	9999	- RFF-DTM
DTM	- C	5	- Date/time/period

Function:
To specify date, and/or time, or period.

e-SLOG 2.0					
Tag	Name	Format	St	Usage	Example
C507	DATE/TIME/PERIOD		**M**		
2005	Date or time or period function code qualifier	an..3	**M**	171 = Reference date/time This segment is used to specify dates relating to the references given in the preceding RFF segment.	171
2380	Date or time or period value	an..35	**R**	BT-10: Datum naročila na katerega se potrditev naročila navezuje (ON). BT-13: Datum referenčnega dokumenta na katerega se potrditev naročila navezuje.	201804251 20015
2379	Date or time or period format code	an..3	**R**	204 = CCYYMMDDHHMMSS 102 = CCYYMMDD	204

Segment Notes:
This segment is used to specify dates relating to the references given in the preceding RFF segment.

Segment number: 7

SG3	- C	99 -	NAD-SG4-SG6
NAD	- M	1 -	Name and address

Function:
To specify the name/address and their related function, either by C082 only and/or unstructured by C058 or structured by C080 thru 3207.

e-SLOG 2.0					
Tag	Name	Format	St	Usage	Example
3035	Party function code qualifier	an..3	**M**	BY = Buyer DP = Delivery party IV = Invoicee SR = Supplier's agent/ representative SU = Supplier UC = Ultimate consignee UD = Ultimate customer	BY
C082	PARTY IDENTIFICATION DETAILS		**D**	For identification of the party C082 must be used. Exceptions are only allowed for parties without GLN. For parties without GLN usage of SG3 is required.	
3039	Party identifier	an..70	**M**	GLN - Format n13 BT-14: GLN kupca (BY).	383234500 0189
1131	Code list identification code	an..17	**N**	Not used	
3055	Code list responsible agency code	an..3	**C**	9 = GS1	9
C058	NAME AND ADDRESS		**N**		
3124	Name and address description	an..35	**N**	Not used	
C080	PARTY NAME		**C**		
3036	Party name	an..70	**M**	BT-17: Naziv kupca.	Kupec d.o.o.
3036	Party name	an..70	**C**		X
3036	Party name	an..70	**C**		X
3036	Party name	an..70	**C**		X
3036	Party name	an..70	**C**		X
C059	STREET		**C**		
3042	Street and number or post office box identifier	an..35	**M**	BT-18: Ulica in hišna številka kupca.	Kupceva ulica 20
3042	Street and number or post office box identifier	an..35	**C**		X
3042	Street and number or post office box identifier	an..35	**C**		X
3042	Street and number or post office box identifier	an..35	**C**		X
3164	City name	an..35	**C**	BT-19: Mesto kupca.	Ljubljana-Crnuce
C819	COUNTRY SUB-ENTITY DETAILS		**N**		

Segment number: 7

e-SLOG 2.0					
Tag	Name	Format	St	Usage	Example
3229	Country sub-entity name code	an..9	**N**	Not used	
3251	Postal identification code	an..17	**C**	BT-20: Poštna številka kupca.	1231
3207	Country name code	an..3	**C**	BT-21: Država kupca.	SI

Segment Notes:

This segment is used to identify the trading partners involved in the Order process. Identification of the buyer and supplier of goods and services is mandatory using DE's 3035 and C082. Additionally, the invoicee and/or delivery party should be specified if different to the buyer. The following composites and data elements are only used when a coded name and address can not be used or there is a requirement to furnish the full name and address for the trading party. The affected composites and data lements are as follows: C080 - C059 - 3164 - C819 - 3251 - 3207

Segment number: 8

SG3	- C	99	- NAD-SG4-SG6
SG4	- D	99	- RFF
RFF	- M	1	- Reference

Function:
To specify a reference.

e-SLOG 2.0					
Tag	Name	Format	St	Usage	Example
C506	REFERENCE		**M**		
1153	Reference code qualifier	an..4	**M**	VA = VAT registration number IT = Internal customer number IA = Internal vendor number YC1 = Additional party identification (GS1 Temporary Code)	VA
1154	Reference identifier	an..70	**R**	BT-15: Davčna številka kupca (VA). BT-16: Ostali referenčni podatki kupca.	SI12345678

Segment Notes:

This segment is used to specify reference numbers related to the party specified in the previous NAD segment. For Buyer(BY) and Supplier(SU) usage of VAT registration number(VA) is required. Usage of other codes should be mutually defined among trading partners.

Segment number: 9

SG3	- C	99 -	NAD-SG4-SG6
SG6	- C	5 -	CTA-COM
CTA	- M	1 -	Contact information

Function:
To identify a person or a department to whom communication should be directed.

e-SLOG 2.0					
Tag	Name	Format	St	Usage	Example
3139	Contact function code	an..3	**R**	OC = Order contact WH = Warehouse CR = Customer relations IC = Information contact Qualifier CR may only be used for consumer(NAD+UC)	OC
C056	DEPARTMENT OR EMPLOYEE DETAILS		**C**		
3413	Department or employee name code	an..17	**N**	Not used	
3412	Department or employee name	an..256	**C**	BT-22: Kontaktne osebe kupca.	Ana Novak

Segment Notes:
This segment is used to identify contact details for the party specified in the previous NAD segment. The GLN - Format n13 - is particularly suitable for this purpose.

Segment number: 10

SG3	- C	99	-	NAD-SG4-SG6
SG6	- C	5	-	CTA-COM
COM	- C	5	-	Communication contact

Function:
To identify a communication number of a department or a person to whom communication should be directed.

e-SLOG 2.0					
Tag	Name	Format	St	Usage	Example
C076	COMMUNICATION CONTACT		**M**		
3148	Communication address identifier	an..512	**M**	BT-23: Naslovi za kontakt kupca.	ana.novak@kupec.si
3155	Communication address code qualifier	an..4	**M**	EM = Electronic mail TE = Telephone	EM

Segment Notes:
This segment identifies the communications number, and type of communications, for the person or department identified in the preceding CTA segment.

Segment number: 11

SG3	- C	99 -	NAD-SG4-SG6
NAD	- M	1 -	Name and address

Function:
To specify the name/address and their related function, either by C082 only and/or unstructured by C058 or structured by C080 thru 3207.

e-SLOG 2.0					
Tag	Name	Format	St	Usage	Example
3035	Party function code qualifier	an..3	**M**	BY = Buyer DP = Delivery party IV = Invoicee SR = Supplier's agent/ representative SU = Supplier UC = Ultimate consignee UD = Ultimate customer	SU
C082	PARTY IDENTIFICATION DETAILS		**D**	For identification of the party C082 must be used. Exceptions are only allowed for parties without GLN. For parties without GLN usage of SG3 is required.	
3039	Party identifier	an..70	**M**	GLN - Format n13 BT-24: GLN dobavitelja (SU).	383456700 0210
1131	Code list identification code	an..17	**N**	Not used	
3055	Code list responsible agency code	an..3	**C**	9 = GS1	9
C058	NAME AND ADDRESS		**N**		
3124	Name and address description	an..35	**N**	Not used	
C080	PARTY NAME		**C**		
3036	Party name	an..70	**M**	BT-27: Naziv dobavitelja.	Dobavitelj d.o.o.
3036	Party name	an..70	**C**		X
3036	Party name	an..70	**C**		X
3036	Party name	an..70	**C**		X
3036	Party name	an..70	**C**		X
C059	STREET		**C**		
3042	Street and number or post office box identifier	an..35	**M**	BT-28: Ulica in hišna številka dobavitelja.	Dobavitelje va ulica 20
3042	Street and number or post office box identifier	an..35	**C**		X
3042	Street and number or post office box identifier	an..35	**C**		X
3042	Street and number or post office box identifier	an..35	**C**		X
3164	City name	an..35	**C**	BT-29: Mesto dobavitelja.	Nova Gorica
C819	COUNTRY SUB-ENTITY DETAILS		**N**		

Segment number: 11

e-SLOG 2.0					
Tag	Name	Format	St	Usage	Example
3229	Country sub-entity name code	an..9	**N**	Not used	
3251	Postal identification code	an..17	**C**	BT-30: Poštna številka dobavitelja.	5000
3207	Country name code	an..3	**C**	BT-31: Država dobavitelja.	SI

Segment Notes:

This segment is used to identify the trading partners involved in the Order process. Identification of the buyer and supplier of goods and services is mandatory using DE's 3035 and C082. Additionally, the invoicee and/or delivery party should be specified if different to the buyer. The following composites and data elements are only used when a coded name and address can not be used or there is a requirement to furnish the full name and address for the trading party. The affected composites and data lements are as follows: C080 - C059 - 3164 - C819 - 3251 - 3207

Segment number: 12

SG3	- C	99	- NAD-SG4-SG6
SG4	- D	99	- RFF
RFF	- M	1	- Reference

Function:
To specify a reference.

e-SLOG 2.0					
Tag	Name	Format	St	Usage	Example
C506	REFERENCE		**M**		
1153	Reference code qualifier	an..4	**M**	VA = VAT registration number IT = Internal customer number IA = Internal vendor number YC1 = Additional party identification (GS1 Temporary Code)	VA
1154	Reference identifier	an..70	**R**	BT-25: Davčna številka dobavitelja(VA). BT-26: Ostali referenčni podatki dobavitelja.	SI12345678

Segment Notes:

This segment is used to specify reference numbers related to the party specified in the previous NAD segment. For Buyer(BY) and Supplier(SU) usage of VAT registration number(VA) is required. Usage of other codes should be mutually defined among trading partners.

Segment number: 13

SG3	- C	99 -	NAD-SG4-SG6
SG6	- C	5 -	CTA-COM
CTA	- M	1 -	Contact information

Function:
To identify a person or a department to whom communication should be directed.

e-SLOG 2.0					
Tag	Name	Format	St	Usage	Example
3139	Contact function code	an..3	**R**	OC = Order contact WH = Warehouse CR = Customer relations IC = Information contact Qualifier CR may only be used for consumer(NAD+UC)	IC
C056	DEPARTMENT OR EMPLOYEE DETAILS		**C**		
3413	Department or employee name code	an..17	**N**	Not used	
3412	Department or employee name	an..256	**C**	BT-32: Kontaktne osebe dobavitelja.	Tine Novak

Segment Notes:
This segment is used to identify contact details for the party specified in the previous NAD segment. The GLN - Format n13 - is particularly suitable for this purpose.

Segment number: 14

SG3	- C	99	-	NAD-SG4-SG6
SG6	- C	5	-	CTA-COM
COM	- C	5	-	Communication contact

Function:
To identify a communication number of a department or a person to whom communication should be directed.

e-SLOG 2.0					
Tag	Name	Format	St	Usage	Example
C076	COMMUNICATION CONTACT		**M**		
3148	Communication address identifier	an..512	**M**	BT-33: Naslovi za kontakt dobavitelja.	tine.novak@dobavitelj.si
3155	Communication address code qualifier	an..4	**M**	EM = Electronic mail TE = Telephone	EM

Segment Notes:
This segment identifies the communications number, and type of communications, for the person or department identified in the preceding CTA segment.

Segment number: 15

SG3	- C	99 -	NAD-SG4-SG6
NAD	- M	1 -	Name and address

Function:
To specify the name/address and their related function, either by C082 only and/or unstructured by C058 or structured by C080 thru 3207.

e-SLOG 2.0					
Tag	Name	Format	St	Usage	Example
3035	Party function code qualifier	an..3	**M**	BY = Buyer DP = Delivery party IV = Invoicee SR = Supplier's agent/ representative SU = Supplier UC = Ultimate consignee UD = Ultimate customer	DP
C082	PARTY IDENTIFICATION DETAILS		**D**	For identification of the party C082 must be used. Exceptions are only allowed for parties without GLN. For parties without GLN usage of SG3 is required.	
3039	Party identifier	an..70	**M**	GLN - Format n13 BT-34: GLN dostavnega mesta (DP).	383234500 0372
1131	Code list identification code	an..17	**N**	Not used	
3055	Code list responsible agency code	an..3	**C**	9 = GS1	9
C058	NAME AND ADDRESS		**N**		
3124	Name and address description	an..35	**N**	Not used	
C080	PARTY NAME		**C**		
3036	Party name	an..70	**M**	BT-36: Naziv dostavnega mesta.	Dostavno Mesto d.o.o.
3036	Party name	an..70	**C**		X
3036	Party name	an..70	**C**		X
3036	Party name	an..70	**C**		X
3036	Party name	an..70	**C**		X
C059	STREET		**C**		
3042	Street and number or post office box identifier	an..35	**M**	BT-37: Ulica in hišna številka dostavnega mesta.	Dostavna ulica 20
3042	Street and number or post office box identifier	an..35	**C**		X
3042	Street and number or post office box identifier	an..35	**C**		X
3042	Street and number or post office box identifier	an..35	**C**		X
3164	City name	an..35	**C**	BT-38: Mesto dostavnega mesta.	Koper
C819	COUNTRY SUB-ENTITY DETAILS		**N**		

Segment number: 15

e-SLOG 2.0					
Tag	Name	Format	St	Usage	Example
3229	Country sub-entity name code	an..9	**N**	Not used	
3251	Postal identification code	an..17	**C**	BT-39: Poštna številka dostavnega mesta.	6000
3207	Country name code	an..3	**C**	BT-40: Država dostavnega mesta.	SI

Segment Notes:

This segment is used to identify the trading partners involved in the Order process. Identification of the buyer and supplier of goods and services is mandatory using DE's 3035 and C082. Additionally, the invoicee and/or delivery party should be specified if different to the buyer. The following composites and data elements are only used when a coded name and address can not be used or there is a requirement to furnish the full name and address for the trading party. The affected composites and data lements are as follows: C080 - C059 - 3164 - C819 - 3251 - 3207

Segment number: 16

SG3	- C	99 -	NAD-SG4-SG6
SG4	- D	99 -	RFF
RFF	- M	1 -	Reference

Function:
To specify a reference.

e-SLOG 2.0					
Tag	Name	Format	St	Usage	Example
C506	REFERENCE		**M**		
1153	Reference code qualifier	an..4	**M**	VA = VAT registration number IT = Internal customer number IA = Internal vendor number YC1 = Additional party identification (GS1 Temporary Code)	IT
1154	Reference identifier	an..70	**R**	BT-35: Referenčni podatki dostavnega mesta.	8765432

Segment Notes:

This segment is used to specify reference numbers related to the party specified in the previous NAD segment. For Buyer(BY) and Supplier(SU) usage of VAT registration number(VA) is required. Usage of other codes should be mutually defined among trading partners.

Segment number: 17

SG3	- C	99 -	NAD-SG4-SG6
SG6	- C	5 -	CTA-COM
CTA	- M	1 -	Contact information

Function:
To identify a person or a department to whom communication should be directed.

e-SLOG 2.0					
Tag	Name	Format	St	Usage	Example
3139	Contact function code	an..3	**R**	OC = Order contact WH = Warehouse CR = Customer relations IC = Information contact Qualifier CR may only be used for consumer(NAD+UC)	IC
C056	DEPARTMENT OR EMPLOYEE DETAILS		**C**		
3413	Department or employee name code	an..17	**N**	Not used	
3412	Department or employee name	an..256	**C**	BT-41: Kontaktne osebe dostavnega mesta.	Maja Novak

Segment Notes:
This segment is used to identify contact details for the party specified in the previous NAD segment. The GLN - Format n13 - is particularly suitable for this purpose.

Segment number: 18

SG3	- C	99	- NAD-SG4-SG6
SG6	- C	5	- CTA-COM
COM	- C	5	- Communication contact

Function:
To identify a communication number of a department or a person to whom communication should be directed.

e-SLOG 2.0					
Tag	Name	Format	St	Usage	Example
C076	COMMUNICATION CONTACT		**M**		
3148	Communication address identifier	an..512	**M**	BT-42: Naslovi za kontakt dostavnega mesta.	maja.novak@dost_mesto.si
3155	Communication address code qualifier	an..4	**M**	EM = Electronic mail TE = Telephone	EM

Segment Notes:
This segment identifies the communications number, and type of communications, for the person or department identified in the preceding CTA segment.

Segment number: 19

SG8	- C	5 - CUX
CUX	- M	1 - Currencies

Function:
To specify currencies used in the transaction and relevant details for the rate of exchange.

e-SLOG 2.0					
Tag	Name	Format	St	Usage	Example
C504	CURRENCY DETAILS		**R**		
6347	Currency usage code qualifier	an..3	**R**	2 = Reference currency	2
6345	Currency identification code	an..3	**R**	EUR = Euro ISO 4217 three alpha. BT-8: Valuta zneskov na potrditvi naročila.	EUR

Segment Notes:
This segment is used to specify currency information for the complete order. The CUX segment is mandatory for international exchanges.

Segment number: 20

SG12	- C	5 - TOD
TOD	- M	1 - Terms of delivery or transport

Function:
To specify terms of delivery or transport.

e-SLOG 2.0					
Tag	Name	Format	St	Usage	Example
4055	Delivery or transport terms function code	an..3	**R**	6 = Delivery condition	6
4215	Transport charges payment method code	an..3	**N**	Not used	
C100	TERMS OF DELIVERY OR TRANSPORT		**C**		
4053	Delivery or transport terms description code	an..3	**C**	INCOTERMS 2000.	CIF
1131	Code list identification code	an..17	**C**	2E = Incoterms 2000 (GS1 Temporary Code)	2E
3055	Code list responsible agency code	an..3	**C**	9 = GS1	9

Segment Notes:
This segment is used in the Purchase Order Response to provide a change or correction to the terms of delivery information provided in a previous Purchase Order or Purchase Order Change Request.

Segment number: 21

SG26	- C	200000	-	LIN-PIA-IMD-QTY-DTM-MOA-SG30-SG31
LIN	- M	1	-	Line item

Function:
To identify a line item and configuration.

e-SLOG 2.0					
Tag	Name	Format	St	Usage	Example
1082	Line item identifier	an..6	**R**	Application generated number of the count of the order lines. BT-43: Številka postavke.	1
1229	Action request/notification description code	an..3	**R**	3 = Changed 5 = Accepted without amendment BT-44: Oznaka stanja postavke, glede na podatke naročila.	5
C212	ITEM NUMBER IDENTIFICATION		**C**		
7140	Item identifier	an..35	**R**	Format n..14 GTIN - this is the number of the article being ordered. If GTIN is not used then C212 is not used. BT-45: GTIN številka artikla.	7612345000206
7143	Item type identification code	an..4	**R**	SRV = GS1 Global Trade Item Number	SRV

Segment Notes:
This segment is used to identify the product being responded to.

Segment number: 22

SG26	- C	200000	-	LIN-PIA-IMD-QTY-DTM-MOA-SG30-SG31
PIA	- C	25	-	Additional product id

Function:
To specify additional or substitutional item identification codes.

e-SLOG 2.0					
Tag	Name	Format	St	Usage	Example
4347	Product identifier code qualifier	an..3	**M**	1 = Additional identification 4 = Substituted for 5 = Product identification Product Id function coded has the following restricted coded functions: 1 - Additional Identification - To provide an additional identity for the product identified in the LIN segment. The additional dentification can consist of : A supplemental identification which provides more information complementary to the main trade item number provided in the LIN segment, e.g., a batch number, promotional variant number, product group number, etc. An alternative identification which may be used where no main trade item number has been provided in the LIN segment, e.g., a buyers article number, an HIBC code, etc. 2 - Identification for substitution - To provide the trade item number of a product which can substitute the product identified by the trade item number provided in the LIN segment when the latter is temporarily unavailable, e.g., a similar or identical product coded with a different GTIN (article coded in a different country), a different size unit of the same product, a similar product with for example a different brand name. 5 - Product Identification - To provide the primary product identification code when no GTIN has been provided in the LIN segment. GTIN should not be used in conjunction with this code value. It should be noted that when this code is used the product code specified here is the code which should be used for invoicing purposes. BT-55: Tip dodatne identifikacije artikla.	5
C212	ITEM NUMBER IDENTIFICATION		**M**		

Segment number: 22

e-SLOG 2.0					
Tag	Name	Format	St	Usage	Example
7140	Item identifier	an..35	**C**	BT-56: Številka identifikacije artikla.	ABC1234
7143	Item type identification code	an..4	**C**	GB = Buyer's internal product group code IN = Buyer's item number SA = Supplier's article number SRV = GS1 Global Trade Item Number SUE = GS1 Global Returnable Asset Identifier, non-serialised BT-57: Vrsta dodatne identifikacije artikla.	IN
1131	Code list identification code	an..17	**N**	Not used	
3055	Code list responsible agency code	an..3	**C**	9 = GS1 91 = Assigned by supplier or supplier's agent 92 = Assigned by buyer or buyer's agent	91

Segment Notes:

This segment is used to specify additional or substitutional item identification codes such as a buyer's, or seller's item number.

Segment number: 23

SG26	- C	200000	-	LIN-PIA-IMD-QTY-DTM-MOA-SG30-SG31
IMD	- C	99	-	Item description

Function:
To describe an item in either an industry or free format.

e-SLOG 2.0					
Tag	Name	Format	St	Usage	Example
7077	Description format code	an..3	**R**	F = Free-form C = Code (from industry code list)	F
C272	ITEM CHARACTERISTIC		**N**		
7081	Item characteristic code	an..3	**N**	Not used	
C273	ITEM DESCRIPTION		**C**		
7009	Item description code	an..17	**C**	CU = Consumer unit (GS1 Permanent Code) TU = Traded unit (GS1 Permanent Code) Details about pricing not allowed here. These are to be transmitted within the PRI segment.	CU
1131	Code list identification code	an..17	**N**	Not used	
3055	Code list responsible agency code	an..3	**C**	9 = GS1	9
7008	Item description	an..256	**C**	BT-58: Opis artikla.	Brezalkohol na pijaca ABC
7008	Item description	an..256	**C**		Zaboj

Segment Notes:
This segment is used to describe the current line item. It is recommended that this segment only be used for coded descriptions. Data element 7008 in clear text should only be used when no product code is available or when free-form descriptions are required by trading partners.

Segment number: 24

SG26	- C	200000	- LIN-PIA-IMD-QTY-DTM-MOA-SG30-SG31
QTY	- C	99	- Quantity

Function:
To specify a pertinent quantity.

e-SLOG 2.0					
Tag	Name	Format	St	Usage	Example
C186	QUANTITY DETAILS		**M**		
6063	Quantity type code qualifier	an..3	**M**	21 = Ordered quantity 59 = Number of consumer units in the traded unit 113 = Quantity to be delivered Code value '59' is only to be used in the Purchase Order Response for confirmation purposes and not to change any information previously agreed and contained in a price or product catalogue.	21
6060	Quantity	an..35	**M**	BT-46: Količina naročenega artikla (21). BT-48: Potrjena količina artikla (113). BT-50: Število enot za končnega potrošnika v naročenem artiklu (59).	48
6411	Measurement unit code	an..8	**D**	KGM = kilogram LTR = litre MTR = metre PCE = Piece (GS1 Temporary Code) Other attributes from codelist may be mutually defined among trading partners. D:This DE is only used if the product being identified is of variable quantity. BT-47: Enota mere naročenega artikla (21). BT-49: Enota mere potrjene količine artikla (113). BT-51: Enota mere za število enot za končnega potrošnika v naročenem artiklu (59).	PCE

Segment Notes:

This segment is used to specify quantity information related to the current line item. If split deliveries are being used, the quantities for the split delivery are specified in segment group 35. The totals for all quantities expressed in the QTY's at segment group level must equal the value in this QTY segment.

Segment number: 25

SG26	- C	200000	- LIN-PIA-IMD-QTY-DTM-MOA-SG30-SG31
DTM	- C	35	- Date/time/period

Function:
To specify date, and/or time, or period.

e-SLOG 2.0					
Tag	Name	Format	St	Usage	Example
C507	DATE/TIME/PERIOD		**M**		
2005	Date or time or period function code qualifier	an..3	**M**	17 = Delivery date/time, estimated 63 = Delivery date/time, latest 64 = Delivery date/time, earliest 69 = Delivery date/time, promised for 76 = Delivery date/time, scheduled for	17
2380	Date or time or period value	an..35	**R**	BT-52: Predviden datum dobave artikla (17).	201809101 50000
2379	Date or time or period format code	an..3	**R**	204 = CCYYMMDDHHMMSS 102 = CCYYMMDD	204

Segment Notes:
This segment is used to specify dates/times relating to the Purchase Order Response, or if required, dates relating to the delivery or collection of the goods.

Segment number: 26

SG26	- C	200000	-	LIN-PIA-IMD-QTY-DTM-MOA-SG30-SG31
MOA	- C	10	-	Monetary amount

Function:
To specify a monetary amount.

e-SLOG 2.0					
Tag	Name	Format	St	Usage	Example
C516	MONETARY AMOUNT		**M**		
5025	Monetary amount type code qualifier	an..3	**M**	203 = Line item amount	203
5004	Monetary amount	n..35	**R**	BT-53: Vrednost postavke (203).	1700.00

Segment Notes:
This segment is used to specify line item monetary amount. For specific purposes usage of this segment should be mutually defined among trading partners.

Segment number: 27

SG26	- C	200000	-	LIN-PIA-IMD-QTY-DTM-MOA-SG30-SG31
SG30	- C	25	-	PRI-CUX
PRI	- M	1	-	Price details

Function:
To specify price information.

e-SLOG 2.0					
Tag	Name	Format	St	Usage	Example
C509	PRICE INFORMATION		**R**		
5125	Price code qualifier	an..3	**M**	AAA = Calculation net AAB = Calculation gross AAE = Information price, excluding allowances or charges, including taxes AAF = Information price, excluding allowances or charges and taxes INF = Information BT-59: Vrsta cene artikla.	AAA
5118	Price amount	n..15	**R**	BT-60: Cena artikla.	12
5375	Price type code	an..3	**N**	Not used	
5387	Price specification code	an..3	**C**	INV = Invoice price DPR = Discount price DR = Dealer price LBL = Labelling price PRP = Promotional price RTP = Retail price BT-61: Specifikacija cene artikla.	RTP
5284	Unit price basis value	n..9	**C**	BT-62: Količina na enoto cene.	1
6411	Measurement unit code	an..8	**C**	KGM = kilogram LTR = litre MTR = metre PCE = Piece (GS1 Temporary Code) BT-63: Merska enota cene.	PCE

Segment Notes:

This segment is used to provide price information for the current line item. The calculation price detailed in the Order Response will always be the Net Unit Price, i.e., Gross Price + Charges - Allowances.
Dependency Notes:
Data elements 5284 and 6411 are used when a product is a variable quantity product, e.g. price per 200 kilos, or when the unit of measure for purchasing, delivery, and invoicing are different for a product, e.g. sugar is not a variable quantity product but ordered and delivered in packs, and invoiced in kilos or tonnes.

Segment number: 28

SG26	- C	200000	-	LIN-PIA-IMD-QTY-DTM-MOA-SG30-SG31
SG30	- C	25	-	PRI-CUX
CUX	- C	1	-	Currencies

Function:
To specify currencies used in the transaction and relevant details for the rate of exchange.

e-SLOG 2.0					
Tag	Name	Format	St	Usage	Example
C504	CURRENCY DETAILS		**C**		
6347	Currency usage code qualifier	an..3	**M**	2 = Reference currency	2
6345	Currency identification code	an..3	**R**	EUR = Euro	EUR
6343	Currency type code qualifier	an..3	**R**	4 = Invoicing currency 9 = Order currency	4

Segment Notes:
This segment is used to specify currency data related to the previous PRI segment.

Segment number: 29

SG26	- C	200000	-	LIN-PIA-IMD-QTY-DTM-MOA-SG30-SG31
SG31	- C	9999	-	RFF
RFF	- M	1	-	Reference

Function:
To specify a reference.

e-SLOG 2.0					
Tag	Name	Format	St	Usage	Example
C506	REFERENCE		**M**		
1153	Reference code qualifier	an..4	**M**	ON = Order number (buyer) CT = Contract number PD = Promotion deal number LI = Line item reference number Qualifier LI refers to the related detail order line of the ORDERS message. The order-number must be submitted in the header of the message with the qualifier ON (VN). (see example): AAK can be used for return-deliveries.	ON
1154	Reference identifier	an..70	**C**		128576
1156	Document line identifier	an..6	**C**	BT-54: Številka postavke originalnega naročila, na katerega se postavka iz potrditve naročila nanaša (ON).	1

Segment Notes:
This segment is used to specify any references, which are applicable to the current line item only. References stated here will override those specified in the heading section when the same qualifier is used.

Segment number: 30

UNS	- C	1 - Section control			
Function: To separate header, detail and summary sections of a message. Notes: To be used by message designers only when required to avoid ambiguities.					
e-SLOG 2.0					
Tag	Name	Format	St	Usage	Example
0081	Section identification	a1	**M**		D
Segment Notes:					

Segment number: 31

UNT	- C	1 - Message trailer			
Function: To end and check the completeness of a message. Notes: 1. 0062, the value shall be identical to the value in 0062 in the corresponding UNH segment.					
e-SLOG 2.0					
Tag	Name	Format	St	Usage	Example
0074	Number of segments in a message	n..10	**M**		30
0062	Message reference number	an..14	**M**		1
Segment Notes:					

Segment number: 32

UNZ	- M	1 - Interchange trailer			
Function: To end and check the completeness of an interchange. Notes: 1. 0020, the value shall be identical to the value in 0020 in the corresponding UNB segment.					
e-SLOG 2.0					
Tag	Name	Format	St	Usage	Example
0036	Interchange control count	n..6	**M**		1
0020	Interchange control reference	an..14	**M**		X
Segment Notes:					

10 Šifranti v ePotrditvi naročila

To poglavje navaja mogoče vnose za določene elemente XML. Poleg seznama šifer sta navedena ime elementa XML in njegov opis. Imena polja so navedena brez predpone D_, ki se pojavi v XML-sintaksi.

0001 Syntax identifier

Code	Code name/description
UNOA	UN/ECE level A As defined in the basic code table of ISO 646 with the exceptions of lower case letters, alternative graphic character allocations and national or application-oriented graphic character allocations.
UNOB	UN/ECE level B As defined in the basic code table of ISO 646 with the exceptions of alternative graphic character allocations and national or application-oriented graphic character allocations.
UNOC	UN/ECE level C As defined in ISO 8859-1 : Information processing - Part 1: Latin alphabet No. 1.
UNOD	UN/ECE level D As defined in ISO 8859-2 : Information processing - Part 2: Latin alphabet No. 2.
UNOE	UN/ECE level E As defined in ISO 8859-5 : Information processing - Part 5: Latin/Cyrillic alphabet.
UNOF	UN/ECE level F As defined in ISO 8859-7 : Information processing - Part 7: Latin/Greek alphabet.
UNOG	UN/ECE level G As defined in ISO 8859-3 : Information processing - Part 3: Latin alphabet.
UNOH	UN/ECE level H As defined in ISO 8859-4 : Information processing - Part 4: Latin alphabet.
UNOI	UN/ECE level I As defined in ISO 8859-6 : Information processing - Part 6: Latin/Arabic alphabet.
UNOJ	UN/ECE level J As defined in ISO 8859-8 : Information processing - Part 8: Latin/Hebrew alphabet.
UNOK	UN/ECE level K As defined in ISO 8859-9 : Information processing - Part 9: Latin alphabet.
UNOW	UN/ECE level W ISO 10646-1 octet with code extension technique to support UTF-8 (UCS Transformation Format, 8 bit) encoding.
UNOX	UN/ECE level X Code extension technique as defined by ISO 2022 utilising the escape techniques in accordance with ISO 2375.
UNOY	UN/ECE level Y ISO 10646-1 octet without code extension technique.

0002 Syntax version number

Code	Code name/description
3	Version 3 ISO 9735 Amendment 1:1992.

4	Version 4 ISO 9735:1998.

0007 Identification code qualifier

Code	Code name/description
14	GS1 Partner identification code assigned by GS1, an international organization of GS1 Member Organizations that manages the GS1 System.

0025 Recipient reference/password qualifier

Code	Code name/description
AA	Reference Recipient's reference/password is a reference.
BB	Password Recipient's reference/password is a password.

0029 Processing priority code

Code	Code name/description
A	Highest priority Requested processing priority is the highest.

0031 Acknowledgement request

Code	Code name/description
1	Requested Acknowledgement is requested.

0035 Test indicator

Code	Code name/description
1	Interchange is a test Indicates that the interchange is a test.
5	Interchange is a service provider test Indicates that this interchange is a test with a service provider.

0051 Controlling agency, coded

Code	Code name/description
UN	UN/CEFACT United Nations Centre for Trade Facilitation and Electronic Business (UN/CEFACT).

0052 Message version number

Code	Code name/description
4	Service message, version 4 Service messages approved and issued as a part of ISO 9735/Version 4, for use with that version of the syntax. Notes: For earlier versions of the UN/EDIFACT CONTRL message, each published by the UN as a stand-alone message, the version number to be used is specified in the message documentation.
D	Draft version/UN/EDIFACT Directory Message approved and issued as a draft message (Valid for directories published after March 1993 and prior to March 1997). Message approved as a standard message (Valid for directories published after March 1997).

0054 Message release number

Code	Code name/description
1	First release Message approved and issued in the first release of the year of the UNTDID (United Nations Trade Data Interchange Directory).
3	Third release, CONTRL message Third release of the service message type CONTRL. Approved and issued as document TRADE/WP.4/R.1186/Rev.1 (including Corr.1) for use with version 2 and 3 of the syntax. Notes: This code shall only be used with the CONTRL message.
01B	Release 2001 - B Message approved and issued in the second 2001 release of the UNTDID (United Nations Trade Data Interchange Directory).

0065 Message type

Code	Code name/description
APERAK	Application error and acknowledgement message A code to identify the application error and acknowledgement message.
AUTACK	Secure authentication and acknowledgement message A code to identify the secure authentication and acknowledgement message.
BANSTA	Banking status message A code to identify the banking status message.
CNTCND	Contractual conditions message A code to identify the contractual conditions message.
COACSU	Commercial account summary message A code to identify the commercial account summary message.
COMDIS	Commercial dispute message A code to identify the commercial dispute message.
CONDRA	Drawing administration message A code to identify the drawing administration message.

CONTRL	Syntax and service report message A code to identify the syntax and service report message.
CREMUL	Multiple credit advice message A code to identify the multiple credit advice message.
DEBMUL	Multiple debit advice message A code to identify the multiple debit advice message.
DELFOR	Delivery schedule message A code to identify the delivery schedule message.
DESADV	Despatch advice message A code to identify the despatch advice message.
DIRDEB	Direct debit message A code to identify the direct debit message.
FINCAN	Financial cancellation message A code to identify the financial cancellation message.
FINSTA	Financial statement of an account message A code to identify the financial statement of an account message.
GENRAL	General purpose message A code to identify the general purpose message.
HANMOV	Cargo/goods handling and movement message A code to identify the cargo/goods handling and movement message.
IFCSUM	Forwarding and consolidation summary message A code to identify the forwarding and consolidation summary message.
IFTMAN	Arrival notice message A code to identify the arrival notice message.
IFTMBC	Booking confirmation message A code to identify the booking confirmation message.
IFTMBF	Firm booking message A code to identify the firm booking message.
IFTMIN	Instruction message A code to identify the instruction message.
IFTSTA	International multimodal status report message A code to identify the international multimodal status report message.
INSDES	Instruction to despatch message A code to identify the instruction to despatch message.
INVOIC	Invoice message A code to identify the invoice message.
INVRPT	Inventory report message A code to identify the inventory report message.
KEYMAN	Security key and certificate management message A code to identify the security key and certificate management message.
MSCONS	Metered services consumption report message A code to identify the metered services consumption report message.
ORDCHG	Purchase order change request message A code to identify the purchase order change request message.
ORDERS	Purchase order message A code to identify the purchase order message.
ORDRSP	Purchase order response message A code to identify the purchase order response message.
OSTENQ	Order status enquiry message A code to identify the order status enquiry message.

OSTRPT	Order status report message A code to identify the order status report message.
PARTIN	Party information message A code to identify the party information message.
PAYDUC	Payroll deductions advice message A code to identify the payroll deductions advice message. Notes: 1. The versions of this message which appear in message directories up to and including the D.99B directory are for use with Version 3 or 4 of the ISO 9735 syntax. Versions of the message which appear in the D.00A and later directories shall be used only with Version 4 of the ISO 9735 syntax. 2. This code value is retained in the Version 3 service code list for information purposes only.
PAYMUL	Multiple payment order message A code to identify the multiple payment order message.
PRICAT	Price/sales catalogue message A code to identify the price/sales catalogue message.
PRODAT	Product data message A code to identify the product data message.
PROINQ	Product inquiry message A code to identify the product inquiry message.
QALITY	Quality data message A code to identify the quality data message.
QUOTES	Quote message A code to identify the quote message.
RECADV	Receiving advice message A code to identify the receiving advice message.
REMADV	Remittance advice message A code to identify the remittance advice message.
REQOTE	Request for quote message A code to identify the request for quote message.
RETANN	Announcement for returns message A code to identify the announcement for returns message.
RETINS	Instruction for returns message A code to identify the instruction for returns message.
SLSFCT	Sales forecast message A code to identify the sales forecast message.
SLSRPT	Sales data report message A code to identify the sales data report message.
TAXCON	Tax control message A code to identify the tax control message.

0081 Section identification

Code	Code name/description
D	Header/detail section separation To qualify the segment UNS, when separating the header from the detail section of a message.
S	Detail/summary section separation To qualify the segment UNS, when separating the detail from the summary section of a message.

1001 Document name code

Code	Code name/description
231	Purchase order response Response to an purchase order already received.

1131 Code list identification code

Code	Code name/description
2E	Incoterms 2000 (GS1 Temporary Code) Incoterms 2000 as published by the International Chamber of Commerce (ICC).

1153 Reference code qualifier

Code	Code name/description
CT	Contract number Reference number of a contract concluded between parties.
IA	Internal vendor number Number identifying the company-internal vending department/unit.
IT	Internal customer number Number assigned by a seller, supplier etc. to identify a customer within his enterprise.
LI	Line item reference number (1156) Reference number identifying a particular line in a document.
ON	Order number (buyer) [1022] Reference number assigned by the buyer to an order.
PD	Promotion deal number Number assigned by a vendor to a special promotion activity.
VA	VAT registration number Unique number assigned by the relevant tax authority to identify a party for use in relation to Value Added Tax (VAT).
VN	Order number (supplier) Reference number assigned by supplier to a buyer's purchase order.
YC1	Additional party identification (GS1 Temporary Code) Reference number to an additional party identification. This number may be the internal trading partner identification number used by a party to identify its trading parties.

1225 Message function code

Code	Code name/description
4	Change Message containing items to be changed.
27	Not accepted Message to inform that the referenced message is not accepted by the recipient.
29	Accepted without amendment Referenced message is entirely accepted.

45	Accepted with reserves Message accepted with reserves.

1229 Action request/notification description code

Code	Code name/description
3	Changed The information is to be or has been changed.
5	Accepted without amendment This line item is entirely accepted by the seller.

2005 Date or time or period function code qualifier

Code	Code name/description
17	Delivery date/time, estimated Date and/or time when the shipper of the goods expects delivery will take place.
63	Delivery date/time, latest Date identifying a point of time after which goods shall not or will not be delivered.
64	Delivery date/time, earliest Date identifying a point in time before which the goods shall not be delivered.
69	Delivery date/time, promised for [2138] Date by which, or period within which, the merchandise should be delivered to the buyer, as agreed between the seller and the buyer (generic term).
76	Delivery date/time, scheduled for The date/time for which delivery is scheduled.
137	Document/message date/time (2006) Date/time when a document/message is issued. This may include authentication.
171	Reference date/time Date/time on which the reference was issued.

2379 Date or time or period format code

Code	Code name/description
102	CCYYMMDD Calendar date: C = Century ; Y = Year ; M = Month ; D = Day.
204	CCYYMMDDHHMMSS Calendar date including time with seconds: C=Century;Y=Year; M=Month;D=Day;H=Hour; M=Minute;S=Second.

3035 Party function code qualifier

Code	Code name/description
BY	Buyer Party to whom merchandise and/or service is sold.
DP	Delivery party (3144) Party to which goods should be delivered, if not identical with consignee.

IV	Invoicee (3006) Party to whom an invoice is issued.
SR	Supplier's agent/representative (3254) Party representing the seller for the purpose of the trade transaction.
SU	Supplier Party who supplies goods and/or services.
UC	Ultimate consignee Party who has been designated on the invoice or packing list as the final recipient of the stated merchandise.
UD	Ultimate customer The final recipient of goods.

3055 Code list responsible agency code

Code	Code name/description
9	GS1 GS1 (formerly EAN International), an organisation of GS1 Member Organisations, which manages the GS1 System.
91	Assigned by supplier or supplier's agent Codes assigned by a seller or seller's agent.
92	Assigned by buyer or buyer's agent Codes assigned by a buyer or buyer's agent.

3139 Contact function code

Code	Code name/description
CR	Customer relations Individual responsible for customer relations.
IC	Information contact Department/person to contact for questions regarding transactions.
OC	Order contact An individual to contact for questions regarding this order.
WH	Warehouse The warehouse contact within an organization.

3155 Communication address code qualifier

Code	Code name/description
EM	Electronic mail Exchange of mail by electronic means.
TE	Telephone Voice/data transmission by telephone.

3207 Country name code

Code	Code name/description

AD	ANDORRA
AE	UNITED ARAB EMIRATES
AF	AFGHANISTAN
AG	ANTIGUA AND BARBUDA
AI	ANGUILLA
AL	ALBANIA
AM	ARMENIA
AN	NETHERLANDS ANTILLES
AO	ANGOLA
AQ	ANTARCTICA
AR	ARGENTINA
AS	AMERICAN SAMOA
AT	AUSTRIA
AU	AUSTRALIA
AW	ARUBA
AZ	AZERBAIJAN
BA	BOSNIA AND HERZEGOVINA
BB	BARBADOS
BD	BANGLADESH
BE	BELGIUM
BF	BURKINA FASO
BG	BULGARIA
BH	BAHRAIN
BI	BURUNDI
BJ	BENIN
BM	BERMUDA
BN	BRUNEI DARUSSALAM
BO	BOLIVIA
BR	BRAZIL
BS	BAHAMAS
BT	BHUTAN
BV	BOUVET ISLAND
BW	BOTSWANA
BY	BELARUS
BZ	BELIZE
CA	CANADA
CC	COCOS (KEELING) ISLANDS
CD	CONGO, THE DEMOCRATIC REPUBLIC OF THE

CF	CENTRAL AFRICAN REPUBLIC
CG	CONGO
CH	SWITZERLAND
CI	COTE D'IVOIRE
CK	COOK ISLANDS
CL	CHILE
CM	CAMEROON
CN	CHINA
CO	COLOMBIA
CR	COSTA RICA
CU	CUBA
CV	CAPE VERDE
CX	CHRISTMAS ISLAND
CY	CYPRUS
CZ	CZECH REPUBLIC
DE	GERMANY
DJ	DJIBOUTI
DK	DENMARK
DM	DOMINICA
DO	DOMINICAN REPUBLIC
DZ	ALGERIA
EC	ECUADOR
EE	ESTONIA
EG	EGYPT
EH	WESTERN SAHARA
ER	ERITREA
ES	SPAIN
ET	ETHIOPIA
FI	FINLAND
FJ	FIJI
FK	FALKLAND ISLANDS (MALVINAS)
FM	MICRONESIA, FEDERATED STATES OF
FO	FAROE ISLANDS
FR	FRANCE
GA	GABON
GB	UNITED KINGDOM
GD	GRENADA
GE	GEORGIA

GF	FRENCH GUIANA
GH	GHANA
GI	GIBRALTAR
GL	GREENLAND
GM	GAMBIA
GN	GUINEA
GP	GUADELOUPE
GQ	EQUATORIAL GUINEA
GR	GREECE
GS	SOUTH GEORGIA AND THE SOUTH SANDWICH ISLANDS
GT	GUATEMALA
GU	GUAM
GW	GUINEA-BISSAU
GY	GUYANA
HK	HONG KONG
HM	HEARD ISLAND AND MCDONALD ISLANDS
HN	HONDURAS
HR	CROATIA
HT	HAITI
HU	HUNGARY
ID	INDONESIA
IE	IRELAND
IL	ISRAEL
IN	INDIA
IO	BRITISH INDIAN OCEAN TERRITORY
IQ	IRAQ
IR	IRAN, ISLAMIC REPUBLIC OF
IS	ICELAND
IT	ITALY
JM	JAMAICA
JO	JORDAN
JP	JAPAN
KE	KENYA
KG	KYRGYZSTAN
KH	CAMBODIA
KI	KIRIBATI
KM	COMOROS
KN	SAINT KITTS AND NEVIS

KP	KOREA, DEMOCRATIC PEOPLE'S REPUBLIC OF
KR	KOREA, REPUBLIC OF
KW	KUWAIT
KY	CAYMAN ISLANDS
KZ	KAZAKSTAN
LA	LAO PEOPLE'S DEMOCRATIC REPUBLIC
LB	LEBANON
LC	SAINT LUCIA
LI	LIECHTENSTEIN
LK	SRI LANKA
LR	LIBERIA
LS	LESOTHO
LT	LITHUANIA
LU	LUXEMBOURG
LV	LATVIA
LY	LIBYAN ARAB JAMAHIRIYA
MA	MOROCCO
MC	MONACO
MD	MOLDOVA, REPUBLIC OF
MG	MADAGASCAR
MH	MARSHALL ISLANDS
MK	MACEDONIA, THE FORMER YUGOSLAV REPUBLIC OF
ML	MALI
MM	MYANMAR
MN	MONGOLIA
MO	MACAU
MP	NORTHERN MARIANA ISLANDS
MQ	MARTINIQUE
MR	MAURITANIA
MS	MONTSERRAT
MT	MALTA
MU	MAURITIUS
MV	MALDIVES
MW	MALAWI
MX	MEXICO
MY	MALAYSIA
MZ	MOZAMBIQUE
NA	NAMIBIA

NC	NEW CALEDONIA
NE	NIGER
NF	NORFOLK ISLAND
NG	NIGERIA
NI	NICARAGUA
NL	NETHERLANDS
NO	NORWAY
NP	NEPAL
NR	NAURU
NU	NIUE
NZ	NEW ZEALAND
OM	OMAN
PA	PANAMA
PE	PERU
PF	FRENCH POLYNESIA
PG	PAPUA NEW GUINEA
PH	PHILIPPINES
PK	PAKISTAN
PL	POLAND
PM	SAINT PIERRE AND MIQUELON
PN	PITCAIRN
PR	PUERTO RICO
PS	PALESTINIAN TERRITORY, OCCUPIED
PT	PORTUGAL
PW	PALAU
PY	PARAGUAY
QA	QATAR
RE	REUNION
RO	ROMANIA
RS	SERBIA
RU	RUSSIAN FEDERATION
RW	RWANDA
SA	SAUDI ARABIA
SB	SOLOMON ISLANDS
SC	SEYCHELLES
SD	SUDAN
SE	SWEDEN
SG	SINGAPORE

SH	SAINT HELENA
SI	SLOVENIA
SJ	SVALBARD AND JAN MAYEN
SK	SLOVAKIA
SL	SIERRA LEONE
SM	SAN MARINO
SN	SENEGAL
SO	SOMALIA
SR	SURINAME
ST	SAO TOME AND PRINCIPE
SV	EL SALVADOR
SY	SYRIAN ARAB REPUBLIC
SZ	SWAZILAND
TC	TURKS AND CAICOS ISLANDS
TD	CHAD
TF	FRENCH SOUTHERN TERRITORIES
TG	TOGO
TH	THAILAND
TJ	TAJIKISTAN
TK	TOKELAU
TM	TURKMENISTAN
TN	TUNISIA
TO	TONGA
TP	EAST TIMOR
TR	TURKEY
TT	TRINIDAD AND TOBAGO
TV	TUVALU
TW	TAIWAN, PROVINCE OF CHINA
TZ	TANZANIA, UNITED REPUBLIC OF
UA	UKRAINE
UG	UGANDA
UM	UNITED STATES MINOR OUTLYING ISLANDS
US	UNITED STATES
UY	URUGUAY
UZ	UZBEKISTAN
VA	HOLY SEE (VATICAN CITY STATE)
VC	SAINT VINCENT AND THE GRENADINES
VE	VENEZUELA

VG	VIRGIN ISLANDS, BRITISH
VI	VIRGIN ISLANDS, U.S.
VN	VIET NAM
VU	VANUATU
WF	WALLIS AND FUTUNA
WS	SAMOA
YE	YEMEN
YT	MAYOTTE
YU	YUGOSLAVIA
ZA	SOUTH AFRICA
ZM	ZAMBIA
ZW	ZIMBABWE

4053 Delivery or transport terms description code

Code	Code name/description
01E	Contact delivery party before delivery (GS1 Temporary Code) Indication that the delivery party should be contacted before delivery.
02E	Despatch goods urgent delivery (GS1 Temporary Code) Requests that the goods be despatched urgently.
03E	Special delivery conditions (GS1 Temporary Code) Indication that the delivery is subject to special conditions agreed between the trading partners.
04E	Cash on delivery (GS1 Temporary Code) Indication that the delivery is subject to cash on delivery conditions.
CFR	Cost & Freight
CIF	Cost, Insurance, Freight to named destination
CIP	Freight, Carriage, Insurance to destination
CPT	Freight, Carriage paid to destination
DAF	Delivery at frontier - Named place
DDP	Delivered duty paid to destination
DDU	Delivered duty unpaid
DEQ	Delivered Ex Quay - Duty paid, Named port
DES	Delivered Ex ship - Named port of destination
EXW	Ex works
FAS	Free alongside ship
FCA	Free carrier - Named point
FOA	FOB Airport - Named airport of departure
FOB	Free on Board - Named port of shipment
FOR	Free on Rail - Named departure point
RDN	Return the delivery note signed by the goods recipient (GS1 Temporary Code) Indication that the delivery note has to be returned signed by the goods recipient.

RPD	Return the number of the "proof of delivery" generated by the goods recipient has to be returned (GS1 Temporary Code) Indication that the number of the "proof of delivery" generated by the goods recipient has to be returned.
SD	Shipment of order split over more than one means of transport (GS1 Temporary Code) Shipment of an order has been split over more than one means of transport.

4055 Delivery or transport terms function code

Code	Code name/description
6	Delivery condition Specifies the conditions under which the goods must be delivered to the consignee.

4347 Product identifier code qualifier

Code	Code name/description
1	Additional identification Information which specifies and qualifies product identifications.
4	Substituted for The given item number is the number of the original product substituted by another.
5	Product identification The item number is for product identification.

5025 Monetary amount type code qualifier

Code	Code name/description
203	Line item amount Goods item total minus allowances plus charges for line item. See also Code 66.

5125 Price code qualifier

Code	Code name/description
AAA	Calculation net The price stated is the net price including allowances/ charges. Allowances/charges may be stated for information only.
AAB	Calculation gross The price stated is the gross price to which allowances/charges, if valid, must be applied.
AAE	Information price, excluding allowances or charges, including taxes The price stated is for information purposes only and excludes all allowances and charges. Taxes however are included in the price.
AAF	Information price, excluding allowances or charges and taxes The price stated is for information purposes only and excludes all allowances, charges and taxes.
INF	Information The price is provided for information.

5387 Price specification code

Code	Code name/description
DPR	Discount price A reduction from the usual list value.
DR	Dealer price Code specifying a dealer price.
INV	Invoice price Price per unit of quantity of a product as specified on an invoice.
LBL	Labelling price Retail price of the buyer that should be printed by the producer on the article's label. The labelling price is not necessary the effective retail price.
PRP	Promotional price The value that is placed on an item that is being developed. The idea is to sell this product for less than one normally would, and make up for it by selling a larger quantity.
RTP	Retail price Price per unit of quantity of a product to be used for retail.

6063 Quantity type code qualifier

Code	Code name/description
21	Ordered quantity The quantity which has been ordered.
59	Number of consumer units in the traded unit Number of units for consumer sales in a unit for trading.
113	Quantity to be delivered The quantity to be delivered.

6343 Currency type code qualifier

Code	Code name/description
4	Invoicing currency The name or symbol of the monetary unit used for calculation in an invoice.
9	Order currency The name or symbol of the monetary unit used in an order.

6345 Currency identification code

Code	Code name/description
EUR	Euro

6347 Currency usage code qualifier

Code	Code name/description

1	Charge payment currency The currency in which charges are to be paid.
2	Reference currency The currency applicable to amounts stated. It may have to be converted.
3	Target currency The currency which should be used to the target destination of the transaction.

6411 Measurement unit code

Code	Code name/description
KGM	kilogram
LTR	litre
MTR	metre
PCE	Piece (GS1 Temporary Code)

7009 Item description code

Code	Code name/description
CU	Consumer unit (GS1 Permanent Code) The package size of a product or products agreed by trading partners as the size sold at the retail point of sale.
TU	Traded unit (GS1 Permanent Code) The package size of a product or products which has been agreed by trading partners as the size which may be ordered, delivered and invoiced.

7077 Description format code

Code	Code name/description
C	Code (from industry code list) Description of an item in coded format.
F	Free-form Description of an item in free form text.

7143 Item type identification code

Code	Code name/description
GB	Buyer's internal product group code Product group code used within a buyer's internal systems.
IN	Buyer's item number The item number has been allocated by the buyer.
SA	Supplier's article number Number assigned to an article by the supplier of that article.
SRV	GS1 Global Trade Item Number A unique number, up to 14-digits, assigned according to the numbering structure of the GS1 system. 'GS1' stands for the 'Global Standards One'.

SUE	GS1 Global Returnable Asset Identifier, non-serialised A unique, 13-digit number assigned according to the numbering structure of the GS1 system and used to identify a type of Reusable Transport Item (RTI).

Dodatek A
(informativni)

Poslovni termini (BT)

A.1 Seznam in opis poslovnih terminov (BT) in skupin poslovnih terminov (BG)

Preglednica vsebuje seznam in opis poslovnih terminov ter izraze XPath eSLOG 2.0 ePotrditev naročila.

Oznaka	Poslovni termin	eSLOG 2.0 ePotrditev naročila XPath
BT-1	Unikatna številka sporočila, ki jo določi pošiljatelj	/PurchaseOrderResponse/M_ORDRSP/S_UNH/D_0062
BT-2	Oznaka vrste potrditve naročila	/PurchaseOrderResponse/M_ORDRSP/S_BGM/C_C002/D_1001
BT-3	Številka potrditve naročila, ki jo določi pošiljatelj	/PurchaseOrderResponse/M_ORDRSP/S_BGM/C_C106/D_1004
BT-4	Vloga dokumenta potrditve naročila	/PurchaseOrderResponse/M_ORDRSP/S_BGM/D_1225
BT-5	Datum in čas izdelave sporočila (137)	/PurchaseOrderResponse/M_ORDRSP/S_DTM[C_C507/D_2005='137']/C_C507/D_2380
BT-6	Predviden datum dobave (17)	/PurchaseOrderResponse/M_ORDRSP/S_DTM[C_C507/D_2005='17']/C_C507/D_2380
BT-7	Preostali datumi, vezani na potrditev naročila	/PurchaseOrderResponse/M_ORDRSP/S_DTM/C_C507/D_2380 (za D_2005='137' oz. D_2005='17' se uporabi BT-5 oz. BT-6)
BT-8	Valuta zneskov na potrditvi naročila	/PurchaseOrderResponse/M_ORDRSP/G_SG8[S_CUX/C_C504/D_6347='2']/S_CUX/C_C504/D_6345
BT-9	Referenca na naročilo, na katero se potrditev naročila navezuje (ON)	/PurchaseOrderResponse/M_ORDRSP/G_SG1/S_RFF[C_C506/D_1153='ON']/C_C506/D_1154
BT-10	Datum naročila, na katero se potrditev naročila navezuje (ON)	/PurchaseOrderResponse/M_ORDRSP/G_SG1[S_RFF/C_C506/D_1153='ON' and S_DTM/C_C507/D_2005='171']/S_DTM/C_C507/D_2380
BG-1	Referenčni dokumenti	
BT-11	Tip referenčnega dokumenta, na katerega se potrditev naročila navezuje	/PurchaseOrderResponse/M_ORDRSP/G_SG1/S_RFF/C_C506/D_1153
BT-12	Številka referenčnega dokumenta, na katerega se potrditev naročila navezuje	/PurchaseOrderResponse/M_ORDRSP/G_SG1/S_RFF/C_C506/D_1154
BT-13	Datum referenčnega dokumenta, na katerega se potrditev naročila navezuje	/PurchaseOrderResponse/M_ORDRSP/G_SG1/S_DTM/C_C507/D_2380
BG-2	Podatki o kupcu	
BT-14	GLN kupca (BY)	/PurchaseOrderResponse/M_ORDRSP/G_SG3[S_NAD/D_3035='BY']/S_NAD/C_C082/D_3039

Oznaka	Poslovni termin	eSLOG 2.0 ePotrditev naročila XPath
BT-15	Davčna številka kupca (VA)	/PurchaseOrderResponse/M_ORDRSP/G_SG3[S_NAD/D_3035='BY']/G_SG4[S_RFF/C_C506/D_1153='VA']/S_RFF/C_C506/D_1154
BT-16	Preostali referenčni podatki kupca	/PurchaseOrderResponse/M_ORDRSP/G_SG3[S_NAD/D_3035='BY']/G_SG4/S_RFF/C_C506/D_1154 (za D_1153='VA' se uporabi BT-15)
BG-3	Naziv in naslov kupca	
BT-17	Naziv kupca	/PurchaseOrderResponse/M_ORDRSP/G_SG3[S_NAD/D_3035='BY']/S_NAD/C_C080/D_3036
BT-18	Ulica in hišna številka kupca	/PurchaseOrderResponse/M_ORDRSP/G_SG3[S_NAD/D_3035='BY']/S_NAD/C_C059/D_3042
BT-19	Mesto kupca	/PurchaseOrderResponse/M_ORDRSP/G_SG3[S_NAD/D_3035='BY']/S_NAD/D_3164
BT-20	Poštna številka kupca	/PurchaseOrderResponse/M_ORDRSP/G_SG3[S_NAD/D_3035='BY']/S_NAD/D_3251
BT-21	Država kupca	/PurchaseOrderResponse/M_ORDRSP/G_SG3[S_NAD/D_3035='BY']/S_NAD/D_3207
BG-4	Kontaktni podatki kupca	
BT-22	Kontaktne osebe kupca	/PurchaseOrderResponse/M_ORDRSP/G_SG3[S_NAD/D_3035='BY']/G_SG6/S_CTA/C_C056/D_3412
BT-23	Naslovi za kontakt kupca	/PurchaseOrderResponse/M_ORDRSP/G_SG3[S_NAD/D_3035='BY']/G_SG6/S_COM/C_C076/D_3148
BG-5	Podatki o dobavitelju	
BT-24	GLN dobavitelja (SU)	/PurchaseOrderResponse/M_ORDRSP/G_SG3[S_NAD/D_3035='SU']/S_NAD/C_C082/D_3039
BT-25	Davčna številka dobavitelja (VA)	/PurchaseOrderResponse/M_ORDRSP/G_SG3[S_NAD/D_3035='SU']/G_SG4[S_RFF/C_C506/D_1153='VA']/S_RFF/C_C506/D_1154
BT-26	Referenčni podatki dobavitelja	/PurchaseOrderResponse/M_ORDRSP/G_SG3[S_NAD/D_3035='SU']/G_SG4/S_RFF/C_C506/D_1154 (za D_1153='VA' se uporabi BT-25)
BG-6	Naziv in naslov dobavitelja	
BT-27	Naziv dobavitelja	/PurchaseOrderResponse/M_ORDRSP/G_SG3[S_NAD/D_3035='SU']/S_NAD/C_C080/D_3036
BT-28	Ulica in hišna številka dobavitelja	/PurchaseOrderResponse/M_ORDRSP/G_SG3[S_NAD/D_3035='SU']/S_NAD/C_C059/D_3042
BT-29	Mesto dobavitelja	/PurchaseOrderResponse/M_ORDRSP/G_SG3[S_NAD/D_3035='SU']/S_NAD/D_3164
BT-30	Poštna številka dobavitelja	/PurchaseOrderResponse/M_ORDRSP/G_SG3[S_NAD/D_3035='SU']/S_NAD/D_3251
BT-31	Država dobavitelja	/PurchaseOrderResponse/M_ORDRSP/G_SG3[S_NAD/D_3035='SU']/S_NAD/D_3207
BG-7	Kontaktni podatki dobavitelja	
BT-32	Kontaktne osebe dobavitelja	/PurchaseOrderResponse/M_ORDRSP/G_SG3[S_NAD/D_3035='SU']/G_SG6/S_CTA/C_C056/D_3412
BT-33	Naslovi za kontakt dobavitelja	/PurchaseOrderResponse/M_ORDRSP/G_SG3[S_NAD/D_3035='SU']/G_SG6/S_COM/C_C076/D_3148
BG-8	Podatki o dostavnem mestu	

Oznaka	Poslovni termin	eSLOG 2.0 ePotrditev naročila XPath
BT-34	GLN dostavnega mesta (DP)	/PurchaseOrderResponse/M_ORDRSP/G_SG3[S_NAD/D_3035='DP']/S_NAD/C_C082/D_3039
BT-35	Referenčni podatki dostavnega mesta	/PurchaseOrderResponse/M_ORDRSP/G_SG3[S_NAD/D_3035='DP']/G_SG4/S_RFF/C_C506/D_1154
BG-9	Naziv in naslov dostavnega mesta	
BT-36	Naziv dostavnega mesta	/PurchaseOrderResponse/M_ORDRSP/G_SG3[S_NAD/D_3035='DP']/S_NAD/C_C080/D_3036
BT-37	Ulica in hišna številka dostavnega mesta	/PurchaseOrderResponse/M_ORDRSP/G_SG3[S_NAD/D_3035='DP']/S_NAD/C_C059/D_3042
BT-38	Mesto dostavnega mesta	/PurchaseOrderResponse/M_ORDRSP/G_SG3[S_NAD/D_3035='DP']/S_NAD/D_3164
BT-39	Poštna številka dostavnega mesta	/PurchaseOrderResponse/M_ORDRSP/G_SG3[S_NAD/D_3035='DP']/S_NAD/D_3251
BT-40	Država dostavnega mesta	/PurchaseOrderResponse/M_ORDRSP/G_SG3[S_NAD/D_3035='DP']/S_NAD/D_3207
BG-10	Kontaktni podatki dostavnega mesta	
BT-41	Kontaktne osebe dostavnega mesta	/PurchaseOrderResponse/M_ORDRSP/G_SG3[S_NAD/D_3035='DP']/G_SG6/S_CTA/C_C056/D_3412
BT-42	Naslovi za kontakt dostavnega mesta	/PurchaseOrderResponse/M_ORDRSP/G_SG3[S_NAD/D_3035='DP']/G_SG6/S_COM/C_C076/D_3148
BG-11	Podatki o postavkah	
BT-43	Številka postavke	/PurchaseOrderResponse/M_ORDRSP/G_SG26/S_LIN/D_1082
BT-44	Oznaka stanja postavke glede na podatke naročila	/PurchaseOrderResponse/M_ORDRSP/G_SG26/S_LIN/D_1229
BT-45	GTIN-številka artikla	/PurchaseOrderResponse/M_ORDRSP/G_SG26/S_LIN/C_C212[D_7143='SRV']/D_7140
BT-46	Količina naročenega artikla (21)	/PurchaseOrderResponse/M_ORDRSP/G_SG26/S_QTY[C_C186/D_6063='21']/C_C186/D_6060
BT-47	Enota mere naročenega artikla (21)	/PurchaseOrderResponse/M_ORDRSP/G_SG26/S_QTY[C_C186/D_6063='21']/C_C186/D_6411
BT-48	Potrjena količina artikla (113)	/PurchaseOrderResponse/M_ORDRSP/G_SG26/S_QTY[C_C186/D_6063='113']/C_C186/D_6060
BT-49	Enota mere potrjene količine artikla (113)	/PurchaseOrderResponse/M_ORDRSP/G_SG26/S_QTY[C_C186/D_6063='113']/C_C186/D_6411
BT-50	Število enot za končnega potrošnika v naročenem artiklu (59)	/PurchaseOrderResponse/M_ORDRSP/G_SG26/S_QTY[C_C186/D_6063='59']/C_C186/D_6060
BT-51	Enota mere za število enot za končnega potrošnika v naročenem artiklu (59)	/PurchaseOrderResponse/M_ORDRSP/G_SG26/S_QTY[C_C186/D_6063='59']/C_C186/D_6411
BT-52	Predviden datum dobave artikla (17)	/PurchaseOrderResponse/M_ORDRSP/G_SG26/S_DTM[C_C507/D_2005='17']/C_C507/D_2380
BT-53	Vrednost postavke (203)	/PurchaseOrderResponse/M_ORDRSP/G_SG26[S_MOA/C_C516/D_5025='203']/S_MOA/C_C516/D_5004
BT-54	Številka postavke originalnega naročila, na	/PurchaseOrderResponse/M_ORDRSP/G_SG26/G_SG31[S_RFF/C_C506/D_1153='ON']/S_RFF/C_C506/D_1156

Oznaka	Poslovni termin	eSLOG 2.0 ePotrditev naročila XPath
	katerega se postavka iz potrditve naročila nanaša (ON)	
BG-12	Identifikacija naročenega artikla	
BT-55	Tip identifikacije artikla	/PurchaseOrderResponse/M_ORDRSP/G_SG26/S_PIA/D_4347
BT-56	Številka identifikacije artikla	/PurchaseOrderResponse/M_ORDRSP/G_SG26/S_PIA/C_C212/D_7140
BT-57	Vrsta identifikacije artikla	/PurchaseOrderResponse/M_ORDRSP/G_SG26/S_PIA/C_C212/D_7143
BT-58	Opis artikla	/PurchaseOrderResponse/M_ORDRSP/G_SG26/S_IMD/C_C273/D_7008
BG-13	Podatki o ceni artikla	
BT-59	Vrsta cene artikla	/PurchaseOrderResponse/M_ORDRSP/G_SG26/G_SG30/S_PRI/C_C509/D_5125
BT-60	Cena artikla	/PurchaseOrderResponse/M_ORDRSP/G_SG26/G_SG30/S_PRI/C_C509/D_5118
BT-61	Specifikacija cene artikla	/PurchaseOrderResponse/M_ORDRSP/G_SG26/G_SG30/S_PRI/C_C509/D_5387
BT-62	Količina na enoto cene	/PurchaseOrderResponse/M_ORDRSP/G_SG26/G_SG30/S_PRI/C_C509/D_5284
BT-63	Merska enota cene	/PurchaseOrderResponse/M_ORDRSP/G_SG26/G_SG30/S_PRI/C_C509/D_6411

Dodatek B
(informativni)

Shema eSLOG 2.0 elektronsko potrditev naročila

B.1 Shema .XML

Aktualna shema .XML dokumenta eSLOG 2.0 elektronska potrditev naročila je dostopna na povezavi:

https://epos.si/assets/docs/eSLOG20_ORDRSP_v200.xsd.

Dodatek C
(informativni)

Demonstracijski primer uporabe

C.1 Primer uporabe elementov segmenta

V poglavju 9 je pri posameznih elementih segmenta naveden primer uporabe. Demonstracijski primer dokumenta eSLOG 2.0 ePotrditev naročila, ki vsebuje vse navedene primere za elemente, je dostopen na povezavi:

https://epos.si/assets/docs/sample_eSLOG20_ORDRSP_v200.xml.

Literatura

[1] Direktiva 2014/55/EU Evropskega parlamenta in sveta z dne 16. aprila 2014 o izdajanju elektronskih računov pri javnem naročanju. Razpoložljivo na http://eurlex. europa.eu/legal-content/EN/TXT/?uri=CELEX:32014L0055.

[2] EANCOM 2002 S4 Edition 2012

[3] ISO/TS 20625:2002, *Electronic data interchange for administration, commerce and transport (EDIFACT) – Rules for generation of XML scheme files (XSD) on the basis of EDI(FACT) implementation guidelines.*

[4] SIST EN 16931-1:2017, *Elektronsko izdajanje računov – 1. del: Semantični podatkovni model ključnih elementov za elektronski račun.*

[5] Uredba (EU), št. 910/2014, Evropskega parlamenta in sveta z dne 23. julija 2014 o elektronski identifikaciji in storitvah zaupanja za elektronske transakcije na notranjem trgu in o razveljavitvi Direktive 1999/93/ES. Razpoložljivo na http://eurlex.europa.eu/legal-content/EN/TXT/?uri=CELEX:32014R0910.

[6] W3C XML shema. Razpoložljivo na https://www.w3.org/TR/xmldsig-core/xmldsig-core-schema.xsd.

[7] W3C-priporočilo za validacijo elementov. Razpoložljivo na https://www.w3.org/TR/xmldsig-core2/.

[8] Zakon o davku na dodano vrednost (ZDDV-1), neuradno prečiščeno besedilo št. 12